Revised Parts list 570 Metal cutting saw Aug 2001

Drwg #	DESCRIPTION	CATALOG n°	Drwg #	DESCRIPTION	CATALOG n°	Drwg #	DESCRIPTION	CATALOG n°
1	Bolt M6	72046	24	Gear 44T	72256	50	Bolt M6	72476
2	Cover	72056	25	Screw M5	72266	54	Base	72486
3	Window	72066	26	Body	72276	58	Cover	72496
4	Dust Cover	72076	28	wire Cover	72286	60	Lock pin	72506
5	Screw M4 (2)	72086	29	Cover	72296	62	Switch	72516
6	Side Dust Cover	72096	30	Bearing 6001	72306	64	Overload Switch	72526
7	Screw M4 (2)	72086	32	Screw M5	72316	65	EMC Filter	72536
8	Left Handle	72106	34	Bearing 608 5C	72346	66	Spring Washer M4	72546
9	Right Handle	72116	35	Motor Housing	72356	67	Washer ref 67	72556
10	Hex Spanner	72126	36	Brush Holder	72366	68	Spring washer M5	72566
11	Hex screw M8	72136	37	Screw M5	72396	69	Brush Set	72576
12	Washer	72146	38	Spindle Lock	72376	70	Brush Cap	72586
13	Upper Flange	72156	40	Handle	72386	71	Hex screw M5	72596
15	Flange	72166	41	Screw M6 incl washer	72396	72	Spring Washer	72606
16	O Ring	72176	42	Stopper	72406	73	Spring	72616
17	Spindle	72186	43	Screw M6 incl washer	72396	74	Dust cover	72656
18	Key	72196	44	Bearing 608GA	72416	76	Wave washer	72716
19	Cover Flange	72206	45	C ring S14	72426	33A	Armature 110V	72326
20	Screw M5 (2)	72216	46	E ring E10	72436	33B	Armature 230V	72336
21	Spring	72226	47	Bolt ref 47	72446	75A	Field Coil -110V	72696
22	Bearing 6202	72236	48	Washer ref 48	72456	75B	Field Coil -230V	72706
23	Bearing seat	72246	49	Lever	72466		570 METAL CASE	73746

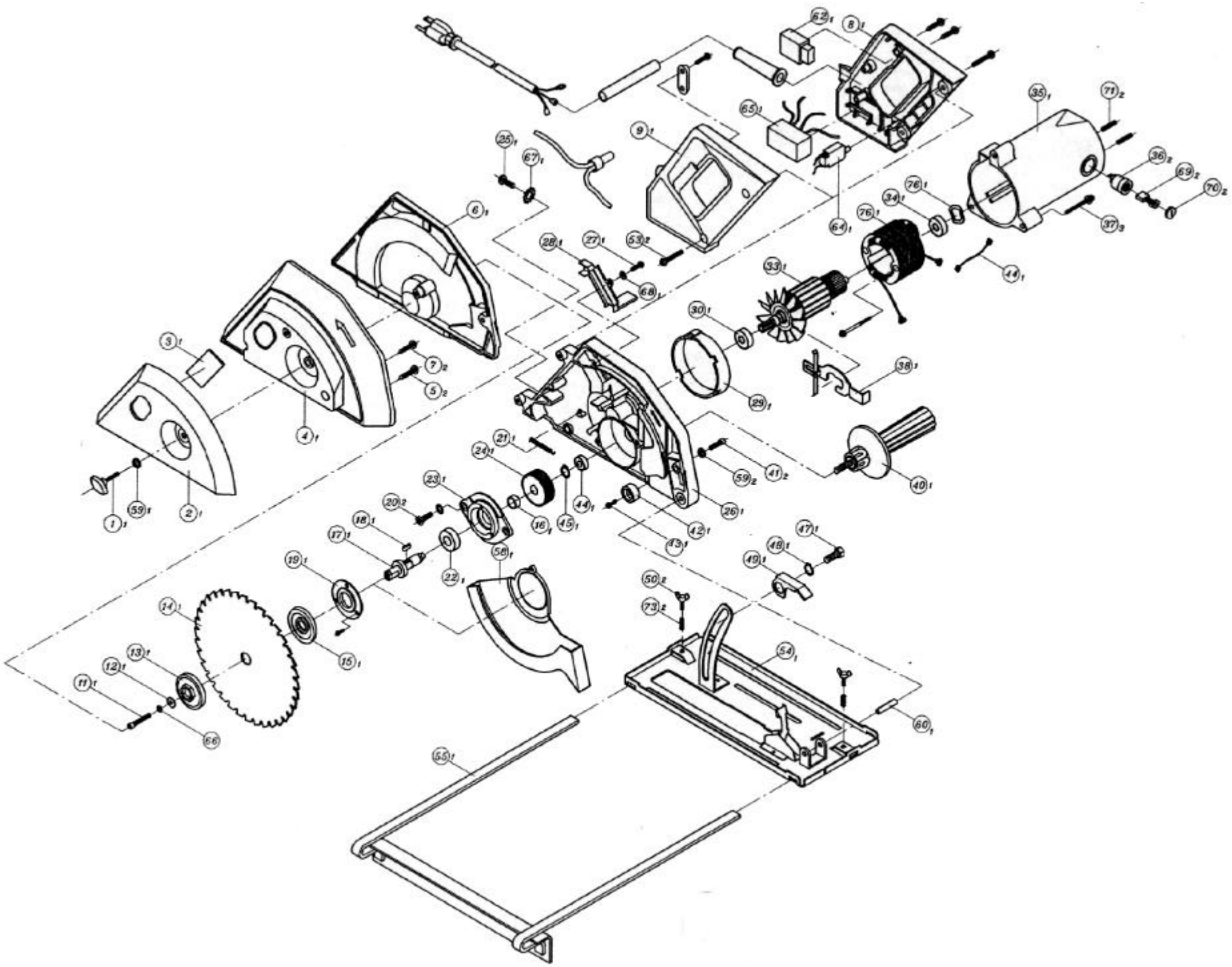
62 1
8 1
35 1
71 2
65 1
9 1
25 1
67 1
36 2
69 2
70 2
76 1
34 1
76 1
64 1
37 3
6 1
28 1
27 1
53 2
33 1
44 1
68 1
30 1
3 1
7 2
5 2
38 1
29 1
4 1
21 1
24 1
59 2
41 2
40 1
23 1
20 2
44 1
26 1
1 1
59 1
2 1
16 1
45 1
42 1
18 1
43 1
17 1
48 1
47 1
19 1
22 1
56 1
49 1
50 2
73 2
14 1
15 1
54 1
13 1
12 1
11 1
66
60 1
55 1